MODEL RZT 42 (2008)
HARNESS NUMBER (725-04621A)
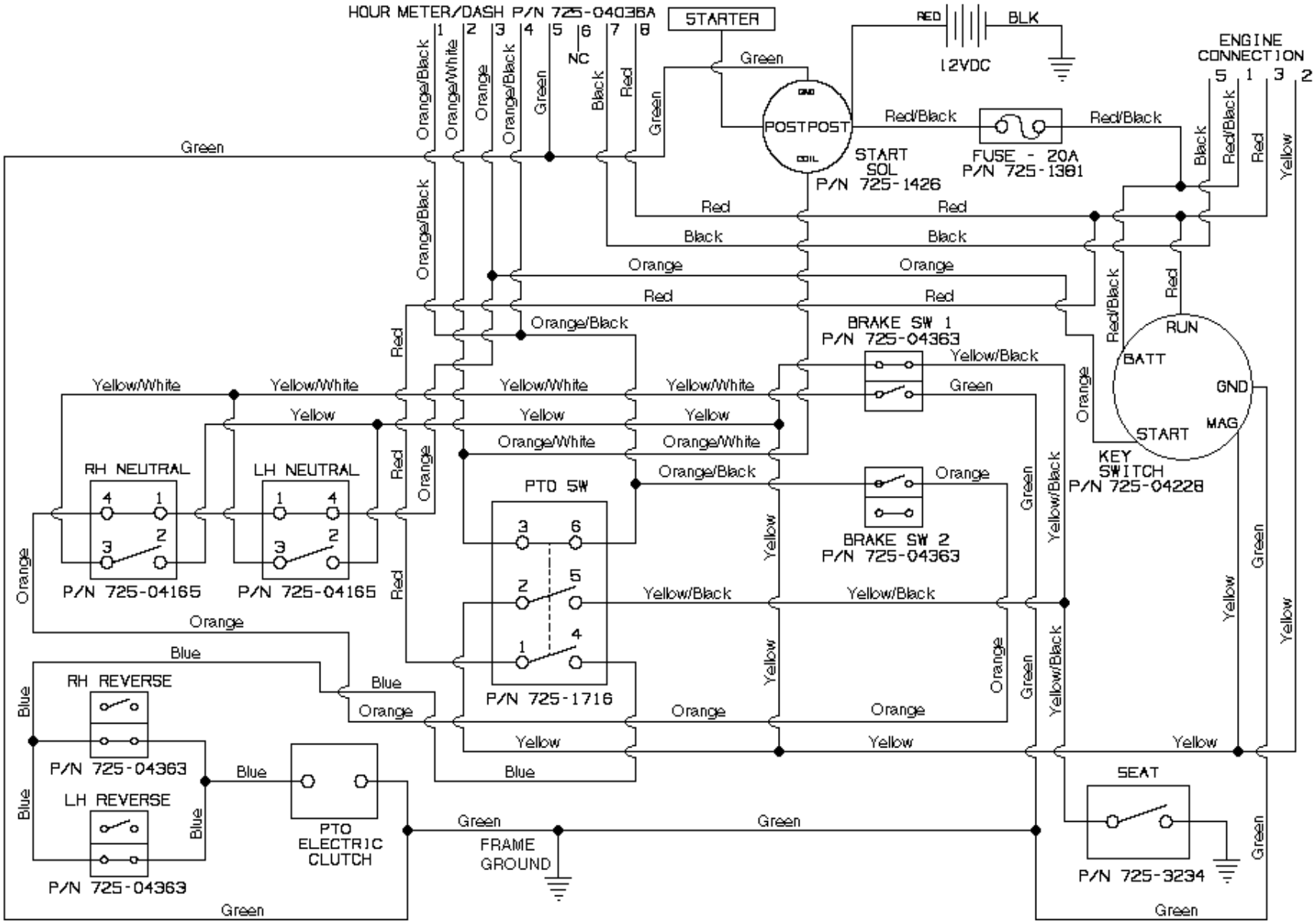
CUBCADETPARTSNMORE.COM
515-266-7944